PAPER • OPEN ACCESS

A Simplified Approach for Optimal Location of distributed Generators within Distribution Network

To cite this article: T.E. Somefun *et al* 2021 *IOP Conf. Ser.: Earth Environ. Sci.* **655** 012033

A Simplified Approach for Optimal Location of distributed Generators within Distribution Network

[1]T.E. Somefun, [1]A. Abdulkareem, [1]C.O.A. Awosope,[2]A.S. Alayande

[1]Department of Electrical and Information Engineering, Covenant University, Canaanland, KM 10, Idiroko, Road, P.M.B. 1023, Ota, Ogun State, Nigeria.
[2]Department of Electrical and Electronics Engineering, University of Lagos, Nigeria.
Corresponding author's e-mail address: tobi.shomefun@covenantuniversity.edu.ng

Abstract. Distribution network is the closest to the consumer of electricity in the whole of the electric power system (EPS) network. It is as important as other parts of the entire system. Lack of sufficient power to meet the required load demand has aided the popularity of distributed generators within the distribution network in order to argument the available power. However, the point of installation of a distributed generator (DG) is essential, considering the entire EPS security. In this work, inherent power system network (IPSN) is proposed to determine the best position for distributed generator within distribution networks, which results in a minimal loss. Matlab R2018a is deployed as a simulation tool. Six bus IEEE network and radial 12-bus network are used to ascertain the feasibility of the proposed method. Results obtained for both test network are validated through the results from the forward-backward sweep method for distribution load flow study.
Keywords: Inherent power system network, optimal, distributed generator, distribution network.

1. Introduction

Most developing nations of the world are still finding it difficult to provide a constant supply of electricity due to several challenges, among which is the demand being higher than available supply [1-4]. Consequently, it has severely hampered their growth with respect to technological advancement, industrialisation, innovation, etc. [5-7]. This problem has been on for several years, andthis is because demand increases on a daily basis[8-10]; hence most nations are adopting integration of distributed generators (DGs) which is a feasible and cheaper solution as compared to centralised generation [11, 12]. Though this distributed generator (DG) option looks very attractive, it is essential to note that best location for the DG is of paramount importance; otherwise, unexpected occurrence might happen which can be very expensive to fix. Several methods have been deployed by previous researchers which can be found in the open literature [12-17]. In this research work, an Inherent Power System Network (IPSN) is proposed to quickly indicate a particular bus in a distribution network that needs to be reinforced. The nodes that need to be reinforced are nodes with voltage less than 0.95 per unit [18]. Forward-Backward sweep method is used to confirm the values of the node voltages after the IPSN has been used to identify the optimal location of the DG.

2. Methodology

The design of the Electric Power System (EPS) is essential to ensure efficient operation of the system. In the same way, any upgrade needed by the system requires a robust mathematical model. Hence, in this study, the aim is to optimally indicate a distributed generator (DG) location within an existing distribution network using an inherent power system network.

2.1. Inherent power system network (IPSN)

It is important to state that a balanced system is assumed with single-phase representation for ease of analysis [19]. Figure 1 shows a simplified network showing only the generating units and loads while the rectangular box represents the inherent structure network.

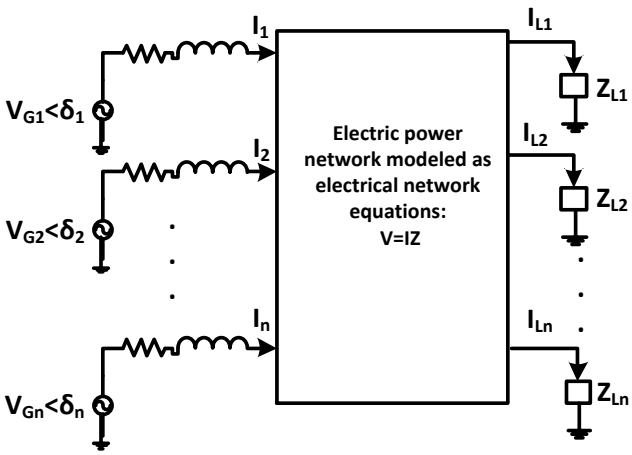

Figure 1: Simple network

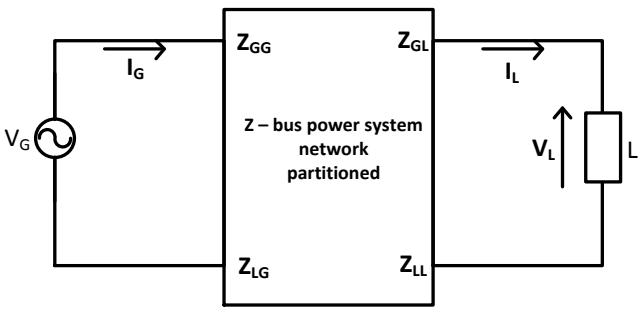

Figure 2: Two-port network representation

The proposed Inherent Power System Network (IPSN) approach is based on two-port network techniques [20-22], and it is capable of giving the exact node where reinforcement is needed to reduce losses along the lines and improve voltage at the nodes. By combining all the generator buses and all the load buses separately as shown in Figure 2, the relevant two-port matrix equation can be written as

$$[V]=[Z][I]=\begin{bmatrix} V_G \\ V_L \end{bmatrix}=\begin{bmatrix} Z_{GG} & Z_{GL} \\ Z_{LG} & Z_{LL} \end{bmatrix}\begin{bmatrix} I_G \\ I_L \end{bmatrix}, \tag{1}$$

where

$[V_G]$ = Vector element of complex voltage of the generator bus; $[V_L]$ = Vector element of complex voltage of the load bus; $[I_G]$ = Vector element of generator bus injected currents; $[I_L]$ = Vector element of load bus injected current; $[Z_{GG}]$ = Impedance matrix for buses with generator; $[Z_{GL}]$ = Impedance matrix relating generator to load; $[Z_{LG}]$ = Impedance matrix relating load to generator; and $[Z_{LL}]$ = Impedance matrix of the load buses.

By splitting equation 1 into two simultaneous equations, the following equations 2 and 3 result:

$$[V_G]=[Z_{GG}][I_G]+[Z_{GL}][I_L] \tag{2}$$

$$[V_L]=[Z_{LG}][I_G]+[Z_{LL}][I_L] \tag{3}$$

Further modifications to equations 2 and 3 in order to solely separate the load buses from the generator buses give equation 4 as follows:

$$\begin{bmatrix} I_G \\ V_L \end{bmatrix}=\begin{bmatrix} Y_{GG} & M_{GL} \\ N_{LG} & D_{LL} \end{bmatrix}\begin{bmatrix} V_G \\ I_L \end{bmatrix}, \tag{4}$$

where

$[Y_{GG}]=[Z_{GG}]^{-1}$

$[M_{GL}]=-[Z_{GG}]^{-1}[Z_{GL}]$.

$[N_{LG}]=[Z_{LG}][Z_{GG}]^{-1}$

$[D_{LL}]=[Z_{LL}]-[Z_{LG}][Z_{GG}]^{-1}[Z_{GL}]$; the Schur complement of Z_{LL}[23].

Equation (4) gives the inherent structural characteristic of power system networks. $[D_{LL}]$ is the matrix for load buses solely, which is known as the Schur complements of the Z-impedance matrix of the considered network [24, 25]. By applying Singular Value Decomposition (SVD) to matrix $[D_{LL}]$, singular values connected to the system load buses are obtained [26] as follows:

$$[D_{LL}]=XZY^T=\sum_{i=1}^{n} x_i \vartheta_i y_i^T , \tag{5}$$

where x matrix is orthogonal to y matrix, and x_i&y_i are singular vectors. From equation (3), the following expression is obtained:

$$[V_L]=[N_{LG}][V_G]+[D_{LL}][I_L] \tag{6}$$

Making $[I_L]$ the dependent variable gives

$$[I_L]=[D_{LL}]^{-1}\left[[V_L]-[N_{LG}][V_G]\right] \tag{7}$$

Substituting equation (5) in (7) gives

$$[I_L]=\left[\sum_{i=1}^{n} m_i \vartheta_i v_i^T\right]^{-1}\left[[V_L]-[N_{LG}][V_G]\right] \tag{8}$$

Hence, from equation (8), the load bus injection current can be expressed as

$$[I_L]=\left[\sum_{i=1}^{n} \frac{v_i m_i^T}{\vartheta_i}\right]\left[[V_L]-[N_{LG}][V_G]\right] \tag{9}$$

Equation (9) shows clearly the direct relationship between the singular value of matrix D_{LL} and load bus injection currents. This simply means that the lower the load injection currents, the lower the single value of the matrix D_{LL} and vice versa. Hence, the bus which required to be reinforced is the bus with the smallest eigenvalue in matrix D_{LL}. As simple as this mathematical relationship seems, it provides the direct optimal location of the best bus for power injection of a distributed generator.

2.2. Forward-Backward sweep

Several research works have reported that the almighty Newton Raphson method cannot handle the load flow solution of distribution network having a high R/X ratio [17, 27]. Hence, the forward-

backward sweep approach [28] is employed to find the base case losses and the upgraded network in order to justify the result from the proposed IPSN approach.
Considering a radial distribution network of n-buses in Figure 3, the solution starts with a forward sweep with an assumption of no-load. Therefore, $V_1 = V_2 = \ldots = V_n$

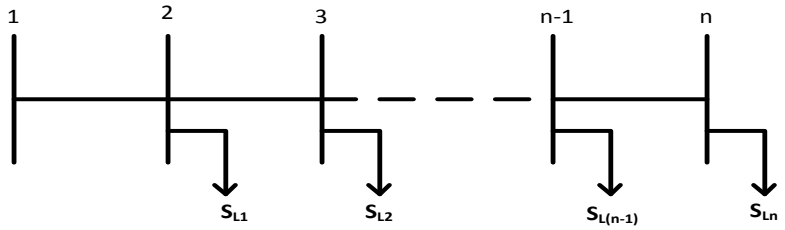

Figure 3: Typical radial distribution network

Then, a backward sweep is followed by calculating load current starting from the nth node until the first node using equation 10

$$I_n = \left(\frac{S_{Ln}}{V_n} \right)^* \tag{10}$$

where $I_n = Load\ current$, $S_{Ln} = Complex\ power$, $V_n = Node\ voltage$

For the nth node, the line current $I_{(n-1),n}$ is load current I_n .

Kirchhoff's voltage law (KVL) is applied to each line section while Kirchhoff's current law (KCL) is applied to each node to determine node voltage and section or branch current as shown in equations 11 and 12

(KVL): $$V_{(n-1)} = V_n + Z_{(n-1)n} I_{(n-1)n} \tag{11}$$

(KCL): $$I_{(n-2)(n-1)} = I_{(n-1)n} + I_{(n-1)} \tag{12}$$

This analysis continues until convergence criterion is met which is given in equation 13

$$cc = \frac{/V_n/ - /V^p/}{/V_1/} \leq 0.0001 \tag{13}$$

where cc is the convergence criterion
$/V^p/$ is set to zero at start and then take up the immediate previous value of $/V_n/$.
The total network losses can be expressed as

$$P_{Loss} = \sum_{i,j=1}^{n} P_{Loss\ i,j} \tag{14}$$

where $P_{Lossi,j}$ in equation (14) is the power loss between two buses, say i and j which have a link between them, otherwise, it will be zero. Equation (14) can be represented in algebraic form, as given in equation (15)

$$P_{Loss} = \sum_{\substack{j=2 \\ j\neq 1}}^{n} V_1 I_{1,j} + \sum_{\substack{j=1 \\ j\neq 2}}^{n} V_2 I_{2,j} + \ldots + \sum_{\substack{j=1 \\ j\neq n}}^{n} V_n I_{n,j} \ , \tag{15}$$

where
n is the total number of network buses; $V_1, V_2, \ldots V_n$ are individual bus voltages; and $I_{1,j}, I_{2,j}, \ldots I_{n,j}$ are currents flowing between any two buses.

3. Result and discussion

In order to simplify the analysis of this work, only overhead distribution lines are considered with uniformly distributed parameters of impedance along the lines. The most important parameters are the impedances of the connected lines, the number of supply and load buses in the network. For this research work, the proposed mathematical model will be implemented on two different networks. The selected networks are IEEE 6-bus system shown in Figure 4 and radial 12-bus system in Figure 5. The details and parameters of these test system are found in [28-31]

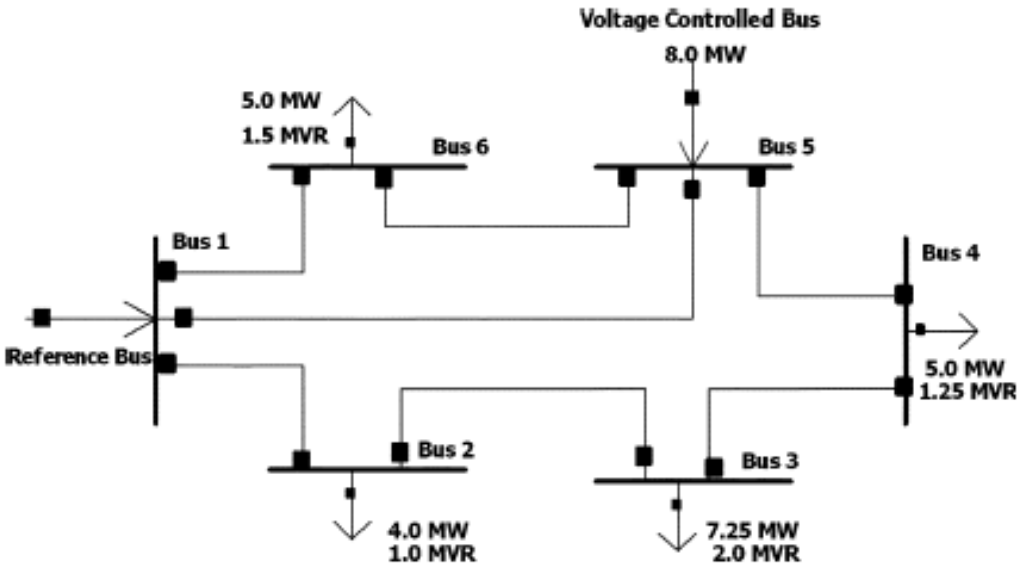

Figure 4: IEEE 6-bus distribution network.

$$D_{LL} = \begin{pmatrix} 0.5565 & 0.2784 & 0.2784 & 0.0000 \\ 0.2784 & 0.4173 & 0.1392 & 0.0000 \\ 0.2784 & 0.1392 & 0.4173 & 0.0000 \\ 0.0000 & 0.0000 & 0.0000 & 0.2251 \end{pmatrix}$$

From the IEEE six-bus system shown in Figure 4, there are four load buses from which the optimal location of DG is obtained. That is why the result of D_{LL} matrix is 4 x 4. These buses are buses 2, 3, 4 and 6.

$$EigenVal[D_{LL}] = \begin{pmatrix} 0.9502 & 0 & 0 & 0 \\ 0 & 0.1629 & 0 & 0 \\ 0 & 0 & 0.2251 & 0 \\ 0 & 0 & 0 & 0.2781 \end{pmatrix}$$

The bus with the lowest eigenvalue is identified as the best location for distributed generator (DG) to be installed, which will, in turn reduces line loss. In this result, the best location for DG is bus 3.

Table 1 shows the result of the forward-backward sweep method. It is clear from the result that the network load buses do not necessarily need to be reinforced as the voltages are within the standard limit. However, when 5kW is injected at bus 3 with respect to result from IPSN, the voltage profile as shown in Table 2 improves, and the kW loss reduces by 11.54% while kVar loss reduces by 13.11%.

Table 1: Base case load flow result without DG

Bus No.	Voltage Mag.	Angle Degree	Load		Substation	
			kW	kVar	kW	kVar
1	1.0000	0.0000	-40	-11	9.2562	3.7643
2	0.9998	-0.0002	40	10	0.0000	0.0000
3	0.9998	-0.0003	7.25	2	0.0000	0.0000
4	0.9998	-0.0003	5	1.25	0.0000	0.0000
5	0.9998	-0.0002	-8	0	0.0000	0.0000
6	0.9997	-0.0003	5	1.5	0.0000	0.0000
Total			9.25	3.75	9.2562	3.7643

Table 2: Load flow result with DG

Bus No.	Voltage Mag.	Angle Degree	Load		Substation	
			kW	kVar	kW	kVar
1	1.0000	0.0000	-40	-11	4.2550	3.7615
2	0.9998	-0.0002	40	10	0.0000	0.0000
3	0.9998	-0.0002	2.25	2	0.0000	0.0000
4	0.9998	-0.0002	5	1.25	0.0000	0.0000
5	0.9998	-0.0002	-8	0	0.0000	0.0000
6	0.9998	-0.0002	5	1.5	0.0000	0.0000
Total			9.25	3.75	4.2550	3.7615

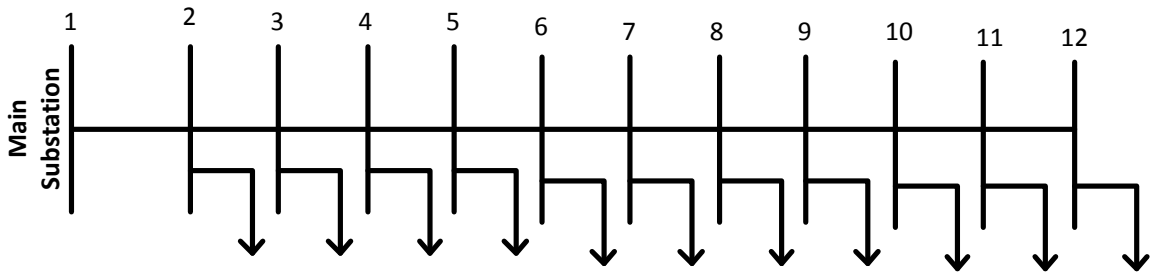

Figure 5: single-line diagram of a radial 12-bus network

Similarly, for the second test network, i.e. radial 12-bus network. The D_{LL} matrix is 11 x 11, since there are 11 buses with load-connected. The eigenvalues from bus 2 to bus 12 are 118.5659, 16.6256, 3.9901, 2.7467, 1.9054, 1.0492, 0.9080, 0.9080, 0.3541, 0.4474, 0.4749 respectively. This result shows that bus 9 with the least eigenvalue is the best location for DG. When the forward-backward sweep approach is applied, the values obtained for node voltages from bus 1 to bus 12 are 1.0000, 0.9944, 0.9892, 0.9808, 0.9703, 0.967, 0.9643, 0.9561, 0.9482, 0.9455, 0.9446, 0.9444 respectively. From this result, it is clearly seen that bus 9 is the first bus with voltage value outside the specified range of $0.95 \leq v \leq 1.05$. By injecting 30kW at bus 9, the network bus voltages profile from bus 1 to bus12 now become 1.0000, 0.9947, 0.9898, 0.9821, 0.9724, 0.9694, 0.9670, 0.9600, 0.9537, 0.951, 0.9501, 0.9500 respectively. Consequently, the kW loss reduces by 16.59% while the kVar loss reduces by 15.86%.

4. Conclusion

In this research, a new and simplified approach is proposed for easy and quick identification of the essential bus that needs to be reinforced without going through the route of load flow. The proposed approach: 'Inherent Power System Network (IPSN)' is used to determine the optimal location of DG on two different networks, namely: IEEE 6-bus network and radial 12-bus network. The optimal location obtained from the proposed approach is justified by the result of the forward-backward sweep method. The result also shows that there is a reduction in losses when DG is placed at the optimal location.

Acknowledgement

The authors wish to acknowledge Covenant University for her support in the completion of this study.

References

[1] A. A. Adewale, A. I. Adekitan, O. J. Idoko, F. A. Agbetuyi, and I. A. Samuel, "Energy audit and optimal power supply for a commercial building in Nigeria," *Cogent Engineering,* vol. 5, p. 1546658, 2018.

[2] T.E.Somefun, C.O.A.Awosope, C. Ahaotu, "Smart prepaid energy metering system to detect energy theft with facility for real time monitoring," *International Journal of Electrical & Computer Engineering (2088-8708),* vol. 9, 2019.

[3] I. A. Samuel, S. Ekundayo, A. Awelewa, T. E. Somefun, and A. Adewale, "Artificial Neural Network Base Short-Term Electricity Load Forecasting: A Case Study of a 132/33kv Transmission Sub-Station," *International Journal of Energy Economics and Policy,* vol. 10, pp. 200-205, 2020.

[4] O. M. Babatunde, C. O. Ayegbusi, D. E. Babatunde, P. O. Oluseyi, and T. E. Somefun, "Electricity Supply in Nigeria: Cost Comparison between Grid Power Tariff and Fossil-Powered Generator," *International Journal of Energy Economics and Policy,* vol. 10, pp. 160-164, 2020.

[5] A. Abdulkareem, "Evaluation and mitigation of technical losses on power lines: a case study of nigeria 330-kv network," Covenant University, Nigeria., 2016.

[6] T. Somefun, C. Awosope, A. Abdulkareem, and A. Alayande, "*Journal of Engineering Science and Technology Review*(JESTR),", vol. 13, pp. 12-17, 2020.

[7] A. S. Al-Sumaiti and M. Salama, "Review on issues related to electric energy demand in distribution system for developing countries," 2014.

[8] A. I. Adekitan, B. Adetokun, T. Shomefun, and A. Aligbe, "Cost implication of line voltage variation on three phase induction motor operation," *Telkomnika,* vol. 16, 2018.

[9] B. B. Adetokun, A. I. Adekitan, T. Somefun, A. Aligbe, and A. Ogunjuyigbe, "Artificial Neural Network-Based Capacitance Prediction Model for Optimal Voltage Control of Stand-alone Wind-Driven Self-Excited Reluctance Generator," in *2018 IEEE PES/IAS PowerAfrica*, 2018, pp. 485-490.

[10] B. Adetokun, T. Somefun, A. I. Adekitan, A. Aligbe, and A. Orimogunje, "Development of an ANN-Based Estimated Electricity Billing System," in *2018 IEEE PES/IAS PowerAfrica*, 2018, pp. 96-101.

[11] T. Shomefun, A. Ademola, C. Awosope, and A. Adekitan, "Critical Review of Different Methods for Siting and Sizing Distributed-generators," *Telkomnika,* vol. 16, 2018.

[12] N. Jain, S. N. Singh, and S. C. Srivastava, "Planning and impact evaluation of distributed generators in Indian context using Multi-Objective Particle Swarm Optimisation," in *2011 IEEE Power and Energy Society General Meeting*, 2011, pp. 1-8.

[13] I. Musa, S. Gadoue, and B. Zahawi, "Integration of distributed generation in power networks considering constraints on discrete size of distributed generation units," *Electric Power Components and Systems,* vol. 42, pp. 984-994, 2014.

[14] S. Ghosh, S. P. Ghoshal, and S. Ghosh, "Optimal sizing and placement of distributed generation in a network system," *International Journal of Electrical Power AND Energy Systems,* vol. 32, pp. 849-856, 2010.
[15] N. Jain, S. N. Singh, and S. C. Srivastava, "Particle swarm optimisation based method for optimal siting and sizing of multiple distributed generators," in *Proceedings of 16th National Power Systems Conference*, 2010, pp. 669-674.
[16] A. El-Zonkoly, "Optimal placement of multi-distributed generation units including different load models using particle swarm optimisation," *Swarm and Evolutionary Computation,* vol. 1, pp. 50-59, 2011.
[17] V. Gupta, S. R. Donepudi, and N. Subrahmanyam, "Optimal placement of distributed generators in distribution system using backtracking search optimisation for various load models," in *2015 International Conference on Recent Developments in Control, Automation and Power Engineering (RDCAPE)*, 2015, pp. 350-354.
[18] S. Chen, W. Hu, C. Su, X. Zhang, and Z. Chen, "Optimal reactive power and voltage control in distribution networks with distributed generators by fuzzy adaptive hybrid particle swarm optimisation method," *IET Generation, Transmission AND Distribution,* vol. 9, pp. 1096-1103, 2015.
[19] L. L. Grigsby, *Electric power generation, transmission, and distribution*: CRC press, 2007.
[20] T. H. Sikiru, A. A. Jimoh, and J. T. Agee, "Inherent structural characteristic indices of power system networks," *International Journal of Electrical Power & Energy Systems,* vol. 47, pp. 218-224, 2013.
[21] T. H. Sikiru, A. A. Jimoh, and J. T. Agee, "Optimal location of network devices using a novel inherent network topology based technique," in *AFRICON, 2011*, 2011, pp. 1-4.
[22] A. S. Alayande, A. A.-G. Jimoh, and A. A. Yusuff, "Reinforcement of Topologically Weak Power Networks Through Network Structural Characteristics Theory," *International Journal of Emerging Electric Power Systems,* vol. 19, 2018 2018.
[23] T. Dhadbanjan and V. Chintamani, "Evaluation of suitable locations for generation expansion in restructured power systems: a novel concept of T-index," *International Journal of Emerging Electric Power Systems,* vol. 10, 2009.
[24] R. W. Cottle, "Manifestations of the Schur complement," *Linear Algebra and its Applications,* vol. 8, pp. 189-211, 1974.
[25] D. Carlson, "What are Schur complements, anyway?," *Linear Algebra and its Applications,* vol. 74, pp. 257-275, 1986.
[26] G. Golub and C. Van Loan, "Matrix computations 3rd edition The John Hopkins University Press," *Baltimore, MD,* 1996.
[27] P. Civicioglu, "Backtracking search optimisation algorithm for numerical optimisation problems," *Applied Mathematics and Computation,* vol. 219, pp. 8121-8144, 2013.
[28] D. Das, H. Nagi, and D. Kothari, "Novel method for solving radial distribution networks," *IEE Proceedings-Generation, Transmission and Distribution,* vol. 141, pp. 291-298, 1994.
[29] C. Wang and M. H. Nehrir, "Analytical approaches for optimal placement of distributed generation sources in power systems," *IEEE Transactions on Power systems,* vol. 19, pp. 2068-2076, 2004.
[30] N. S. Rau and Y.-h. Wan, "Optimum location of resources in distributed planning," *IEEE Transactions on Power systems,* vol. 9, pp. 2014-2020, 1994.
[31] M. Aman, G. Jasmon, H. Mokhlis, and A. Bakar, "Optimal placement and sizing of a DG based on a new power stability index and line losses," *International Journal of Electrical Power & Energy Systems,* vol. 43, pp. 1296-1304, 2012.