A current-regulated magnet power supply for magnetic resonance and susceptibility studies

J Sthanapati†, A K Ghoshal†, D K Dey†, A K Pal† and S N Bhattacharyya‡
† Department of Magnetism and ‡ Department of Physical Chemistry, Indian Association for the Cultivation of Science, Jadavpur, Calcutta-700032, India

Received 25 August 1976

Abstract This note describes a highly stabilized magnet power supply system for magnetic resonance/susceptibility instrumentation, which is capable of providing a current of 0–5 A into a 40 Ω magnet coil together with linear current sweep facilities. This system can easily be adopted for magnets of any resistance. The DC drift is about 1 part in 10^5 per hour and low-frequency peak-to-peak noise is less than 1 part in 10^6. Long-term (1 h) nonlinearity in sweep is less than 1%.

1 Introduction

The present current regulator circuit is similar in principle to most of the current regulators available in the literature (Garwin *et al* 1959, Brog and Milford 1960, Cole and Vaughan 1963, Cook *et al* 1964). Considerable simplification in design and saving in cost have been obtained by the use of presently available inexpensive integrated circuit operational amplifiers. Moreover, to make it suitable for recording magnetic resonance spectra, a linear current sweep facility over a wide range at a number of sweep rates has also been provided. Magnet current can also be set at any desired value by manual operation.

2 Circuit description

The basic current regulator circuit is shown in figure 1. Power is derived from 220 V AC mains and then stabilized by an AC voltage stabilizer T_1, which also acts as an isolation transformer. The output of T_1 is then converted to DC using a bridge rectifier D_1–D_4 followed by a choke–capacitor smoothing filter circuit.

The principle of operation of the current stabilizer is as follows. The magnet coil, the series element consisting of 20 power transistors having V_{CEO} of 250 V and a 0·2 Ω standard resistance R_s, which are in series, are connected across the 220 V DC source. The temperature of R_s is kept at 35°C within a thermostat chamber whose temperature is regulated to within ±0·05°C. The current passing through the magnet coil

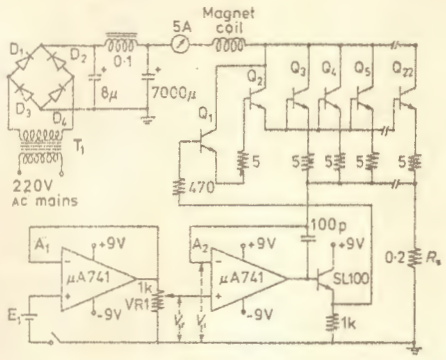

Figure 1 Current regulator circuit. D_1–D_4: EC605; Q_1–Q_{22}: SDT7903

and series element also passes through R_s and as a result a voltage V_1 develops across it. This voltage is compared with a very stable reference voltage V_r derived from a standard cell E_1 buffered by a unity-gain amplifier A_1.

The difference in voltage between V_r and V_1 is amplified by a high-gain ($\approx$70 dB) amplifier A_2. For A_2 a low-cost operational amplifier μA741 of moderate slew rate is used because, for an inductive load like the magnet coil, an expensive, fast-response operational amplifier is not necessary. A 100 pF capacitor is inserted in the feedback path of the amplifier to prevent any oscillation. The output of A_2 is fed to the base of transistor Q_1 through an emitter follower. Transistors Q_1 and Q_2 provide the required current gain to transistors Q_3–Q_{22} connected in parallel. Any drift in magnet current will alter V_1 in the same direction and cause the output voltage of A_2 to effect the required current stabilization. The current through the magnet coil can be varied by changing V_r between 0 and 1 V by means of a ten-turn Helipot VR1 which causes a change of current from 0 to 5 A through a 40 Ω magnet coil.

3 Sweep unit

A simple electronic current sweep circuit has been described by VanderVen (1968). However, to obtain long-term integration, which is essential for faithful recording of magnetic resonance spectra, this circuit needs an expensive operational amplifier having very low input bias current as well as very low input offset voltage.

For economic reasons, a mechanical sweep circuit has been incorporated. For current sweep provision, the voltage reference circuit is slightly altered as shown in figure 2. The voltage derived from a standard cell E_1 is buffered by an operational amplifier A_1 and fed to two ten-turn Helipots, VR1 and VR2, which provide two voltages V_m and V_s respectively. An operational amplifier, type MC1456, having low input bias current and low average temperature coefficient of input offset

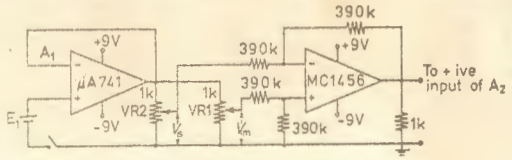

Figure 2 Current sweep circuit

voltage is used as a summing amplifier, the output (V_1) which is the difference between the input voltages V_m and [illegible] Therefore, any variation in V_m or V_s will change V_r which [illegible] turn, will alter the magnet current, and thus linear swe[illegible] derived by driving the potentiometer VR2 with the help [illegible] synchronous clock motor through a variable gear train. [illegible] speed of sweep can be adjusted by changing the gear ratio [illegible] before, the potentiometer VR1 is used for manual sweep.

4 Performance

NMR has been used to measure the stability of the magn[illegible] field of a Newport 4 in electromagnet (resistance of ma[illegible] coils is 40 Ω) powered by the present stabilizer. The stabili[illegible] about 1 part in 10^5 per hour which in terms of field is b[illegible] than $\pm 2\times10^{-5}$ T. Low-frequency peak-to-peak noise is [illegible] than 1 part in 10^6. The linearity of the current sweep has [illegible] measured by a digital multimeter of 0·1 % accuracy. The s[illegible] term (15 min) and long-term (1 h) nonlinearities in the s[illegible] are less than 0·1 % and 1 % respectively. Current sweep ca[illegible] made from 0 to 5 A in the present circuit arrangement and [illegible] time taken for the total sweep can be varied from 1 min to [illegible] by changing the gear ratio of the synchronous motor.

Acknowledgments

The authors are indebted to Professor A Bose, DSc, FNA [illegible] constant encouragement and advice, and to Sri A K D[illegible] Head of the Department of Magnetism, for his kind inte[illegible] One of the authors (DKD) is thankful to CSIR (Governm[illegible] of India) for the award of a junior research fellowship.

References

Brog K C and Milford F J 1960 *Rev. Sci. Instrum.* 31 [illegible] 321–2

Cole P H and Vaughan R 1963 *J. Sci. Instrum.* 40 411–[illegible]

Cook J B, George R E and Grant E H 1964 *J. Sci. Instr[illegible]* 41 390–2

Garwin R L, Hutchinson D, Penman S and Shapiro G [illegible] *Rev. Sci. Instrum.* 30 105–7

VanderVen N S 1968 *Rev. Sci. Instrum.* 39 408–9

Journal of Physics E: Scientific Instruments 1977 Volum[illegible]
Printed in Great Britain © 1977